281

V"OLV"OPENTA.

AB Volvo Penta
SE-405 08 Goteborg, Sweden

Parts Bulletin

Group	Number	Version
P-97-4	**12**	**01**

QL Thruster Remote Control
Models: QL Accessories

Distribution: Parts Date: 10-2007 Binder: Parts Replaces:

Installation Guidelines for QL Thruster Remote Control

QL Thruster remote control (optional, not available on all markets)

The remote control can be used to operate a single bowl stern thruster or a bow and stern thruster combination.

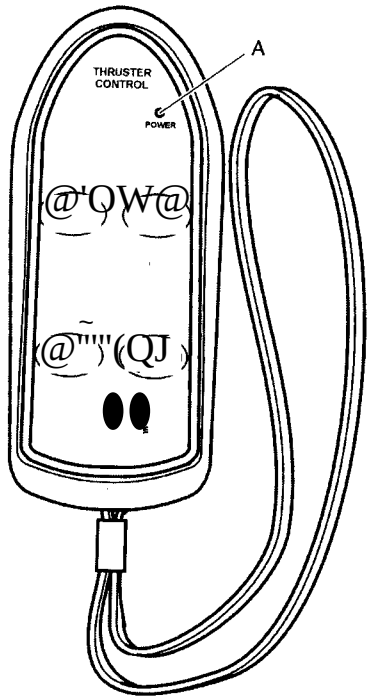

& Important!

You must always install at least one fixed QL Thrusterpanel.

& Important!

When installed in boats approved or classified according to international or special national rules, the installer is responsible for following the demands in accordance with these regulations / classification rules. The instructions in this manual can not be guaranteed to comply with all different regulations / classification rules. The remote control is approved for use in EU/EFTA countries (CE) or US/Canada (FCC). For other countries, please contact your local authorities.

The control unit must be fitted with an antenna. The remote control and electronics unit must also be programmed to communicate with each other.

To ensure longer battery life, the remote control turns off automatically five minutes after the last usage. Deactivation is signalled with two short sound bursts and blinking of the "POWER" indicator (A).

All subsequent use of buttons is shown on the associated indicator above the button and a short sound.

The "POWER" indicator is also used to indicate low voltage at the control unit. This is indicated by an orange light. If the thruster is overloaded and requires time to cool down, this will also be indicated by an orange light. The indicator will be flashing red in case of system faults and slowly blink red together with short sounds if the remote control is unable to communicate with the control unit. These error messages are shown when buttons are pushed.

& Important!

Do not operate thruster if low voltage is indicated.

Technical specifications

	Wireless remote:	Motor control unit:
Model:	RC-01	ECU-01
Power supply:	3 x 1.5V battery (type: LR03/ AAA)	From thruster
Battery endurance:	2-3 years, (normal leisure use)	Not applicable
Communication:	Two ways, narrowband, GFSK modulation	
Frequency (MHz):	868.075 - 869.125, CE (EU/EFTA)* 902.175 - 903.025, FCC (US/Canada)*	
Channels:	16 for communication	
Channel separation:	50 kHz	
Address range:	65.535 (16 bit), spread among the 16 channels	
Operational temp. range:	-20°C to +85°C, _4°F to + 185°F	-20°C to +45°C, -4°F to + 1130F
HxWxD(mm):	127x53x22	Model dependent
Weight (g):	105	Model dependent
Protection level:	IP68 (Floating)**	IP41

* May apply to other countries. For information, please contact local authorities for the country concerned.
** Conditional correct installed and intact rubber gasket and a-rings.

Connection diagram (optional equipment)

& Important!

The control unit must be the same voltage version as the battery and the thruster / electric motor.

& Important!

Place the battery as close as possible to the thruster / electric motor.

& Important!

Place the fuse and main switch as close as possible to the battery and readability accessible.

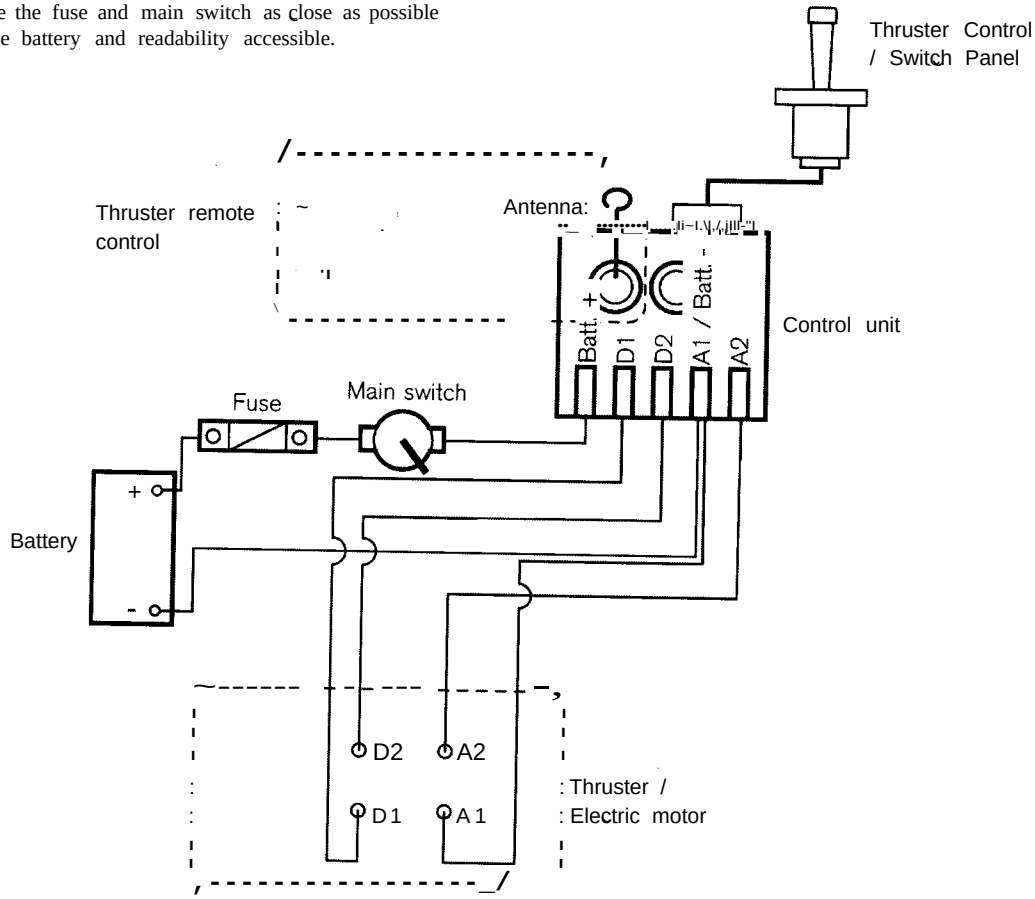

Note! All cables between the control unit and the electric motor shall be as short as possible for best performance. Maximum cable length is 1.5 m (5 ft). Minimum cable insulation rating is 105°e (2210F).

Connecting the antenna

1.

Remove the left rubber *cover*. Then push the antenna through the cover (on one side). See fig. 25

2.

While holding down the antenna connector handle, push the antenna all the way down into the bottom of the clamp. Release the handle and the antenna is fixed in place (see fig. 26).

3.

Replace the rubber cover. Start by pushing the rubber cover in by the antenna and continue around the edge until the cover is fixed in place (see fig. 27).

Make sure not to twist the cover with the antenna.

Notel The remote control will function over short distances without the antenna.

Fig. 25

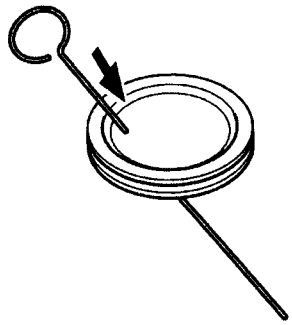

Fig. 26

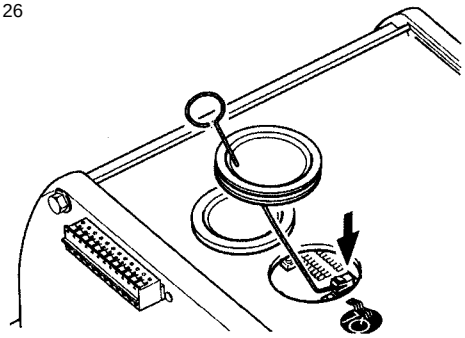

Fig. 27

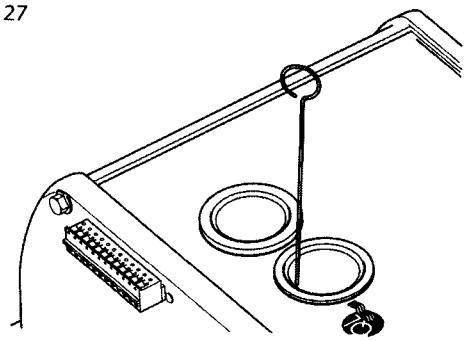

Programming the units

To synchronize the remote control and the control unit(s). The remote control can be programmed electronically to communicate a maximum of two control unit(s). Both the control unit and the remote control must be in programming mode and be close to each other.

& Important!

Ensure no other programming operation is performed within a radius of 300 m (900 ft).

1. Setting the remote control In programming mode

The remote control is set in programming mode by holding down both buttons in the bow or stern pair of buttons continuously for 10 seconds (see fig. 28). The remote control indicates programming mode by slowly blinking the "POWER" indicator green and a short sound. The remote control will remain in this mode until a valid code has been received. (It will automatically turn off after five minutes or when the same two buttons are pushed again.)

When leaving this mode, there will be a short sound burst and the "POWER" indicator will turn off.

2. Setting the control unit In programming mode

Method 1: Systems with touch panel

Hold down both buttons on the touch panel and turn on the main switch (see fig. 29 and fig. 30). The control unit will be in programming mode for 10 seconds after buttons are released.

Press one of the two buttons on the selected pair on the remote control (see fig. 31).

Completed programming is confirmed with a short sound signal from the remote control and the control unit will return to normal mode.

The remote control is now programmed and ready for use.

Method 2:

Temporarily connect between 1,2 and 3 on the 12-pin connector (see fig. 32) and turn on the main switch.

Press one of the two buttons on the selected pair on the remote control (see fig. 31).

Completed programming is confirmed with a short sound signal from the remote control and the control unit will return to normal mode.

Reinstall the original wires to 1, 2 and 3.

Note! The control unit will be in programming mode as long as 1, 2 and 3 is connected together.

Reprogramming can be done an unlimited number of times.

Fig. 28

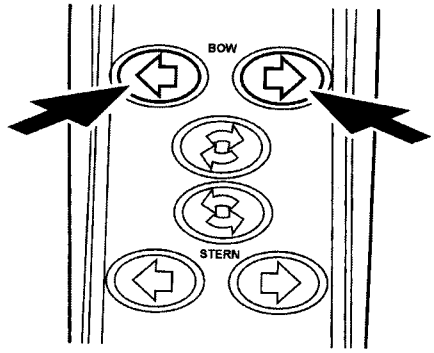

Fig. 29

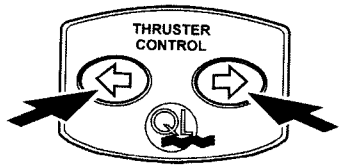

Fig. 30

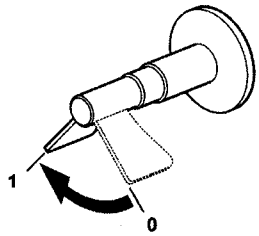

Fig. 31

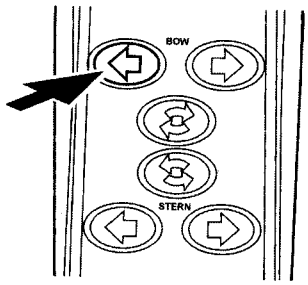

Fig. 32

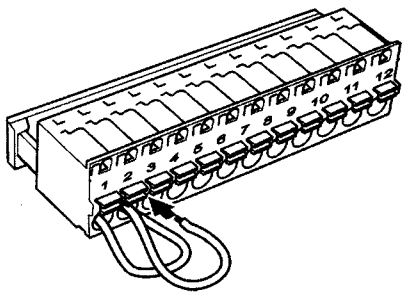

Reversing direction

Remote control

If the operating direction when using the remote control is wrong, follow this procedure.

1.

Turn off the main power switch(es).

2.

Remove the rubber cover.

3.

Change position on DIP switch 8 (see fig. 34).

4.

Turn the main power switch(es) for the thruster(s) on and verify in a safe and controlled manner correct operation from all thruster control panels and the remote control.

Fig. 33

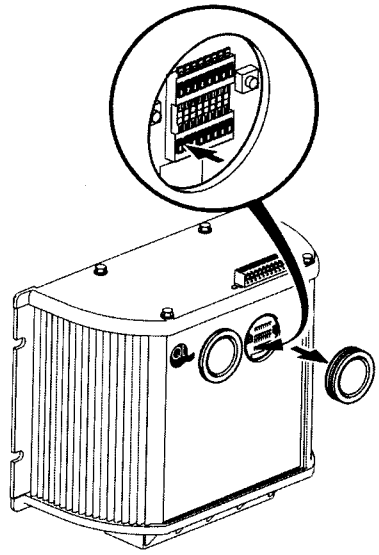

How to use a bow thruster

& Warning!

Never use the remote control if not onboard the boat.

Note! Please take some time to practice thruster usage in open water to avoid damages to your boat.

1.

Turn the main power switch for the thruster on.

2.

Activate the remote control by holding down any button for 1.5 seconds. Activation is indicated by a steady green light in the "POWER" indicator and a short sound (see fig. 7).

When the remote control has been activated, the selected thruster can immediately be operated by pressing the "arrow" button in the desired direction. The thruster will be running as long as the button is depressed (see fig. 8).

By pressing the opposite direction "arrow" button the thruster will be activated in the opposite direction.

For more detailed information; see the examples of manoeuvering at the last pages of this manual.

Fig. 6

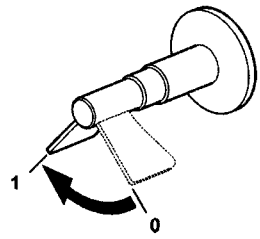

Fig. 7

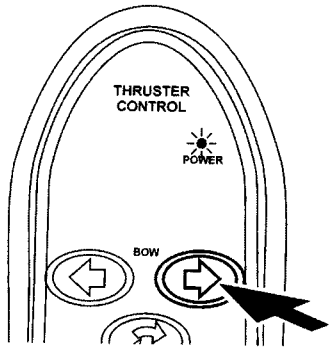

How to use a bow & stern thruster

The combination of a bow and stern thruster offers total manouverability to the boat and the opportunity to move the bow and the stern separately of each other.

For more detailed information; see the examples of manoeuvering at the last pages of this manual.

& Important!

When using thruster(s) take to consideration the inertia effects, i.e. the boat will continue to move after you release the button, therefore remember to release the button shortly before reaching your desired position.

Fig. 8

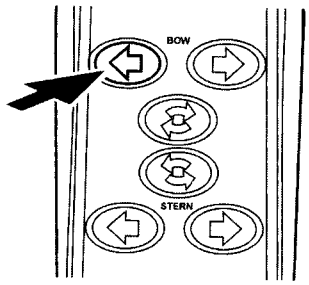

Vessel rotation

Notel Requires both bow and stern thruster installed.

Rotation of the vessel can be initiated by single button operation. By pressing the clockwise or counter-clockwise button in the centre area of the transmitter the corresponding thruster's directions on both the bow and stern thruster will be activated simultaneously (see fig. 9).

Fig. 9

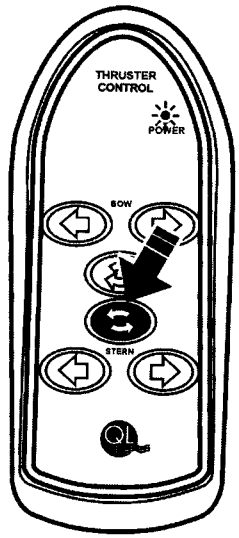

Maintenance

Battery replacement

The remote control uses three regular AAA/LR03 batteries. The battery lifetime is more than two seasons under normal use.

1.

Open the unit by unscrewing all screws on the back of the remote control (see fig. 8).

Note! The screws are of different lengths and have O-rings under the screw heads.

2.

Replace the batteries. Be sure to insert the batteries with the positive pole up (see fig. 8).

3.

Reassemble the the back cover and carefully screw the parts together until the housing gasket is lightly compressed.

& Important!

The impermeability of this unit depends on intact O-rings and intact gasket with the right compression.

& Important!

To ensure a long lifetime, this remote control has acid-proof machine screws and screw inserts in the housing. The screws may penetrate the housing if screwed carelessly or too much force is used. (Not covered by the warranty)

Fig. 8

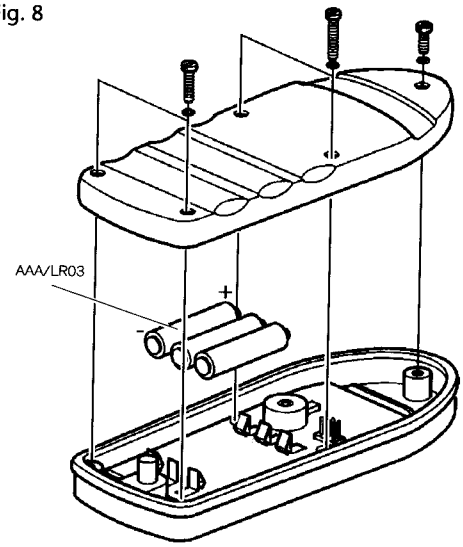

QL Thruster requirements

Thruster	Motor	Maximum cable length 1) – minimum cable dimension.				Required minimum battery capacity		Required fuse amp.
		length 1)		Dim.2)		Ah	CCA (SAE)	
		m	ft	mm 2	AWG			
BP300	12 V/2 kW	1 - 10 10 - 20	1 - 33 33 - 67	70 95	2/0 3/0	50 Ah/12 V	550	200 A (P/N 41100904)
BP800	12 V/5 kW	1 - 10 10-20	1 - 33 33 - 67	120 150	4/0 300MCN	300 Ah/12 V	1700	400 A (P/N 411 00907)
BP800	24 V/5 kW	1 - 10 10-20	1 - 33 33 - 67	95 120	3/0 4/0	150 Ah/24 V	1050	350 A (P/N 411 00906)
BP1200	24 V/7 kW	1 - 10 10-20	1 - 33 33 - 67	95 120	3/0 4/0	175 Ah/24 V	1150	400 A (P/N 411 00907)
BP1300	24 V/7 kW	1 - 10 10 - 20	1 - 33 33 - 67	95 120	3/0 4/0	175 Ah/24 V	1150	400 A (P/N 411 00907)
CT600	12 V/4 kW	1 - 10 10 -20	1 - 33 33 - 67	95 120	3/0 4/0	100Ah/12V	800	350 A (P/N 41100906)
CT600	24 V/4 kW	1 - 10 10 - 20	1 - 33 33 - 67	95 95	3/0 3/0	100Ah/24 V	800	300 A (P/N 411 00905)
CT900	12 V/4 kW	1 - 10 10 - 20	1 - 33 33 - 67	95 120	3/0 4/0	150 Ah/12 V	1050	400 A (P/N 411 00907)
CT900	24 V/4 kW	1 -10 10 -20	1 - 33 33 - 67	95 120	3/0 4/0	150 Ah/24 V	1050	300 A (P/N 411 00905)
SP600	12V /4 kW	1 - 10 10-20	1 - 33 33 - 67	70 95	2/0 3/0	100 Ah/12 V	800	300 A (P/N 411 00905)
SP600	24 V/4 kW	1 - 10 10 -20	1 - 33 33 - 67	70 95	2/0 3/0	70 Ah/24 V	625	300 A (P/N 411 00905)
SP900	12 V/5 kW	1 - 10 10 - 20	1 - 33 33 - 67	120 150	4/0 300MCN	300 Ah/12 V	1700	400 A (P/N 411 00907)
SP900	24 V/5 kW	1 - 10 10 -20	1 - 33 33 - 67	95 120	3/0 4/0	150 Ah/24 V	1050	350 A (P/N 41100906)
SP1300	24 V/7 kW	1 - 10 10-20	1 - 33 33 - 67	95 120	3/0 4/0	175 Ah/24 V	1150	400 A (P/N 411 00907)

1) The distance from the thruster unit to the battery, one way, each cable.
Use of *even* larger cable dimensions and larger battery capacity may improve thruster performance.

2) Wiring insulation rating is 105°C (221°F) minimum.

® How to operate ® How to operate ® How to operate ® How to operate

@ How to operate ~~ How to operate @ How to operate <p~ How to operate
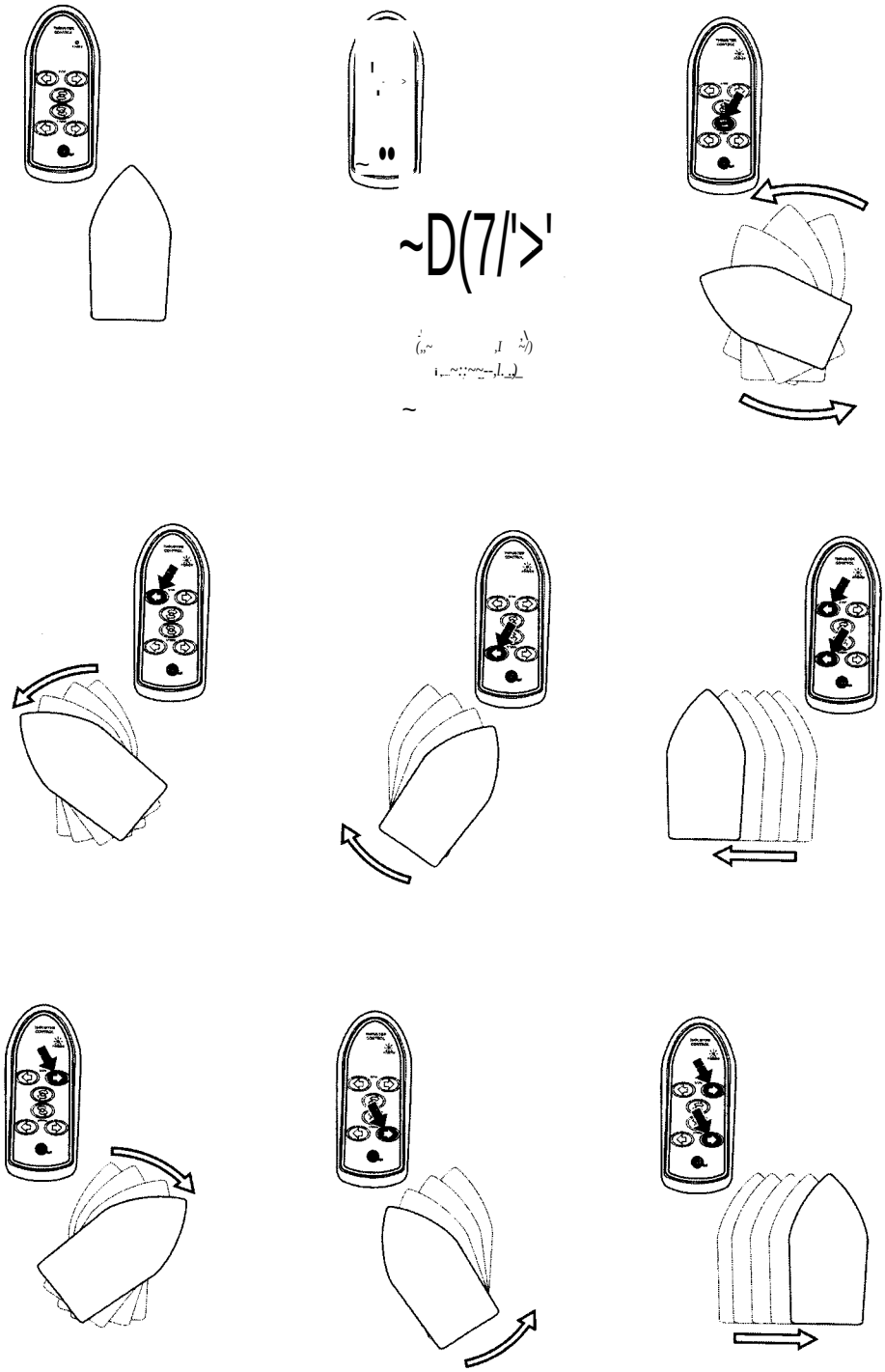
@ How to operate @ How to operate ® How to operate